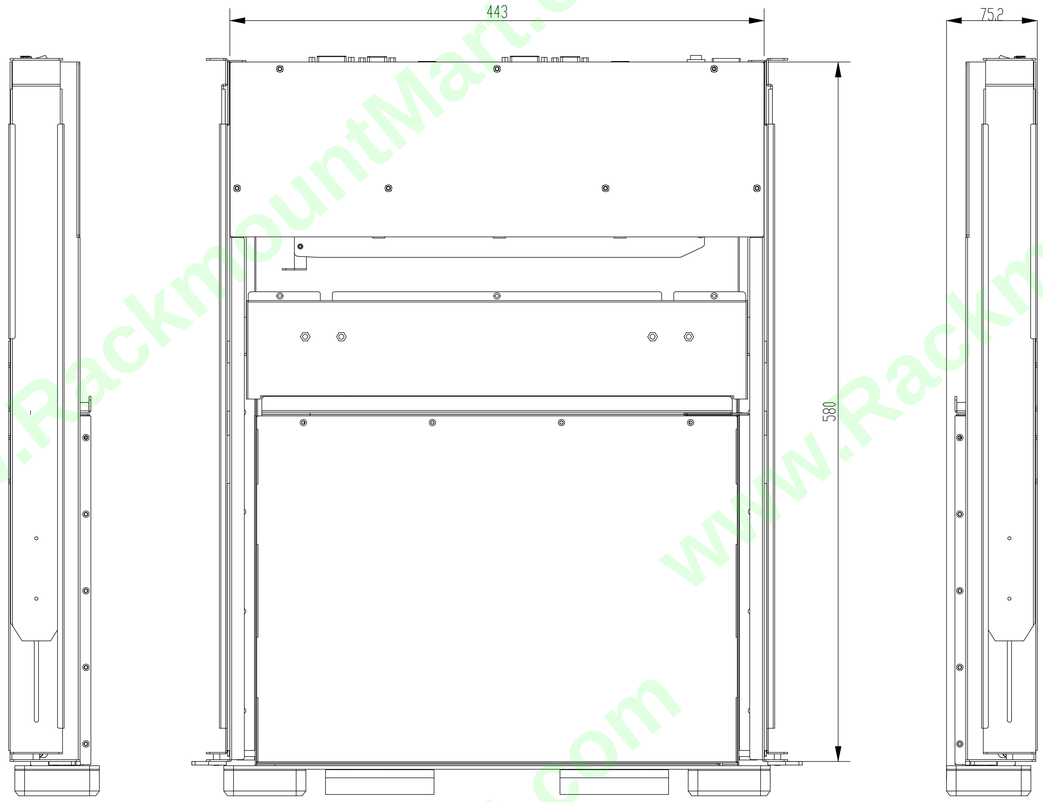

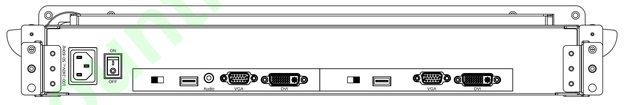

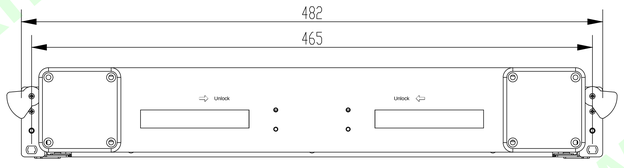

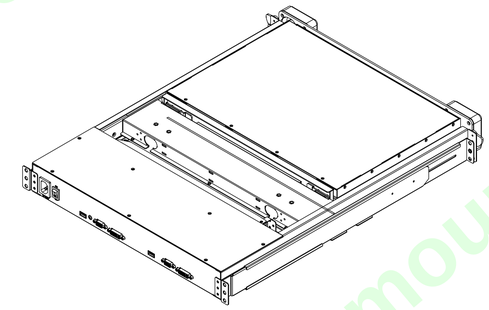

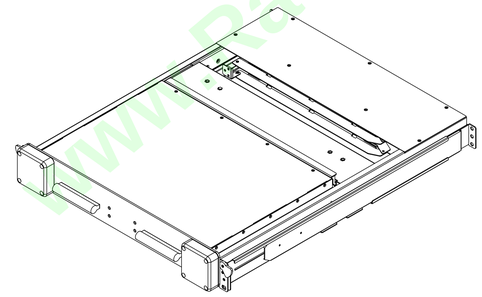

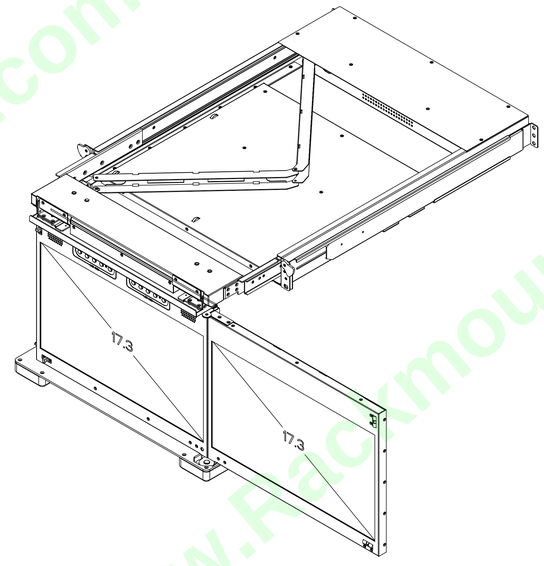

LCD2U17-2H-014

Unit = mm

Synergy Global Technology Inc
www.RackmountMart.com

www.RackmountMart.com