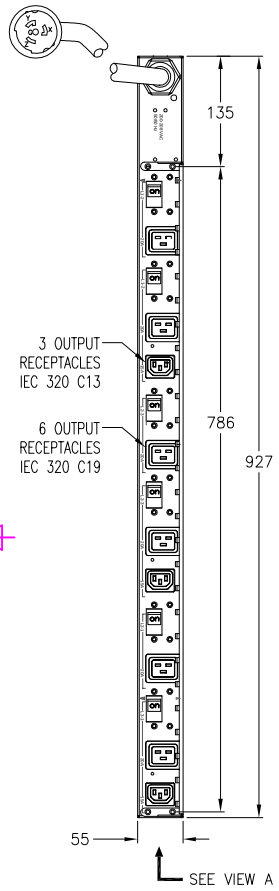

FRONT VIEW

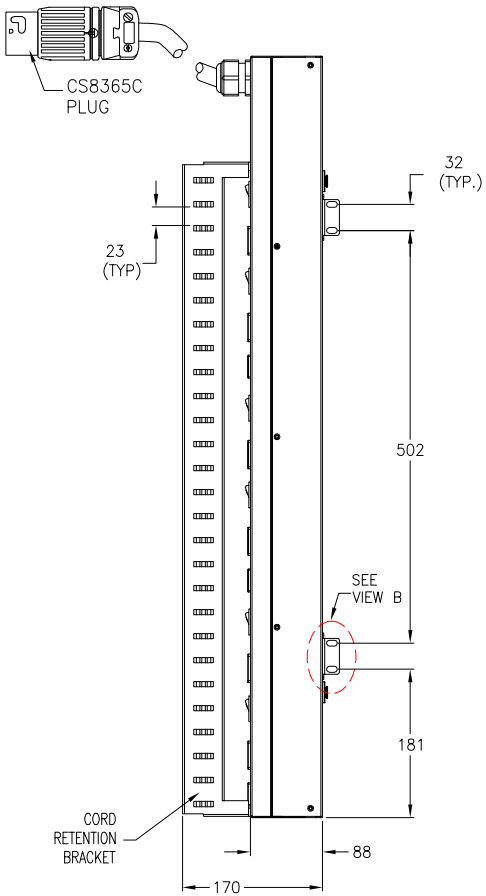

SIDE VIEW

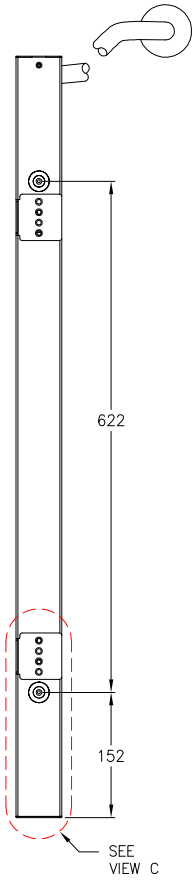

REAR VIEW

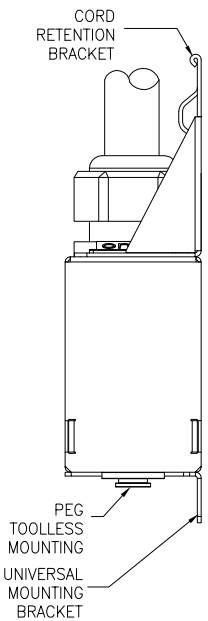

VIEW–A (ENLARGED)

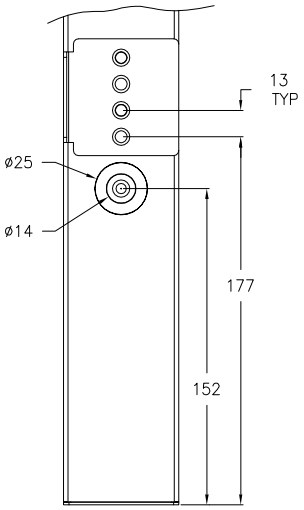

VIEW C
TOOLLESS MOUNTING (ENLARGED)

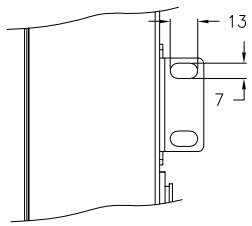

VIEW–B
MOUNTING BRACKET (ENLARGED)

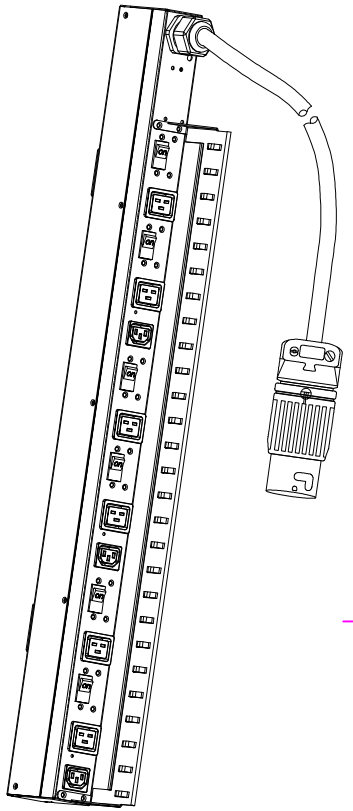

ISOMETRIC VIEW

RAH5009-C-50A-CS

NOTES:
1. ALL DIMENSIONS ARE IN MILLIMETERS.
2. NET WEIGHT IS 7.25 kgs.
3. LENGTH OF THE CORD IS 1830mm.
4. UNIVERSAL MOUNTING BRACKET IS AN ALTERNATIVE MOUNTING METHOD TO THE TOOLLESS MOUNT FOR NON APC RACKS.
5. BRACKET KITS TO MOUNT TO SPECIFIC COMPETITORS RACKS ARE AVAILABLE AS OPTIONS.
6. INSTALLATION MUST COMPLY WITH ALL APPLICABLE NATIONAL AND LOCAL CODES.

Synergy Global Technology Inc
www. RackmountMart.com