修改符號	日期	變更說明	修改者

Synergy Global Technology Inc
www.RackmountMart.com

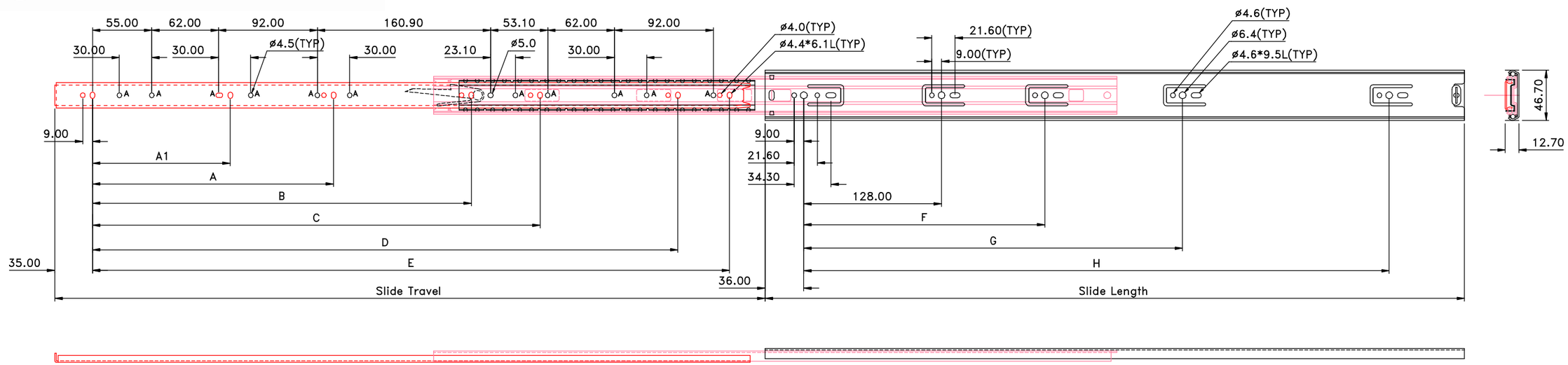

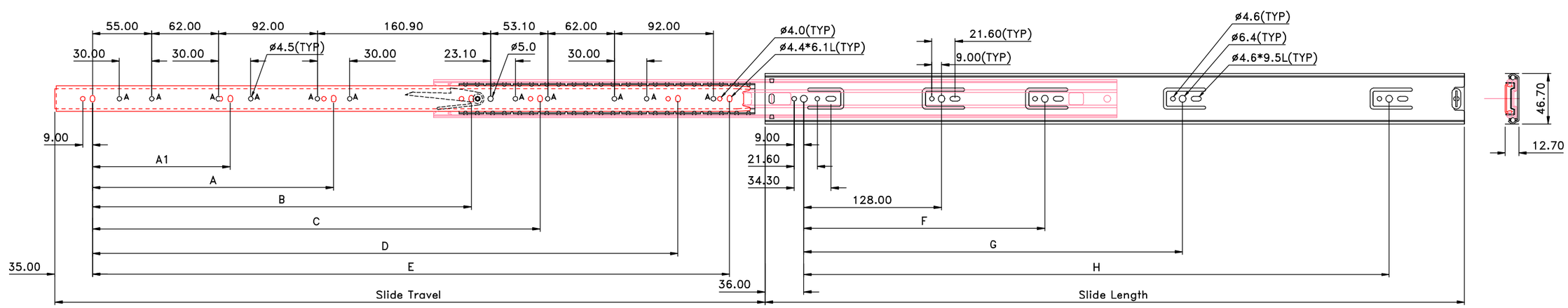

Slide Number	Slide Length inches	Slide Length mm	Slide Travel inches	Slide Travel mm	A1 inches	A1 mm	A inches	A mm	B inches	B mm	C inches	C mm	D inches	D mm	E inches	E mm	F inches	F mm	G inches	G mm	H inches	H mm	Slide Weight kg / pr
20”	19.69	500	20	508	5.04	128	7.56	192	13.86	352					17.40	442	8.82	224	16.38	416			1.64
26”	25.59	650	26	660	5.04	128	8.82	224			16.38	416	21.42	544	23.31	592	8.82	224	13.86	352	21.42	544	2.11