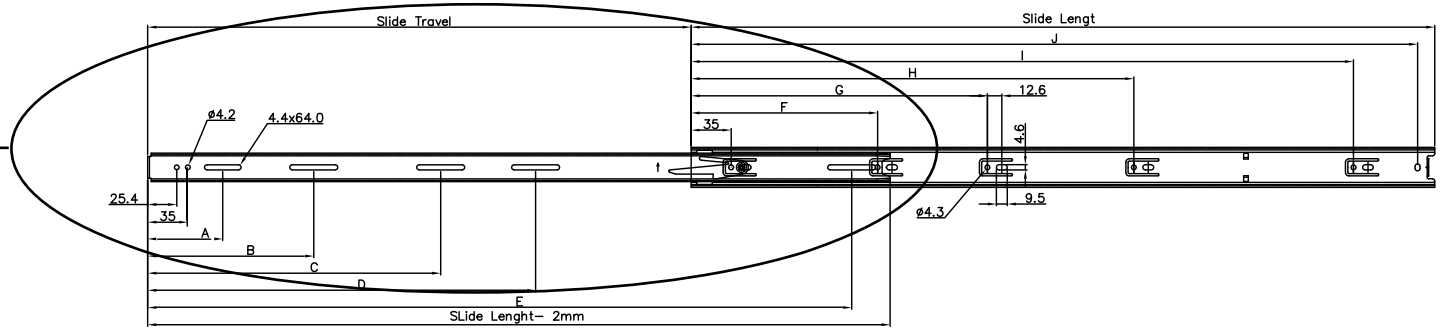

Part NO.	SIZE	Side Length mm	Side Travel mm	A mm	B mm	C mm	D mm	E mm	F mm	G mm	H mm	I mm	J mm	Load Rating kg/pr
RL-08	18"	450	350	65.6	130.1	216.1	279.1	422.6	163.0	259.0	387.0		435.0	37

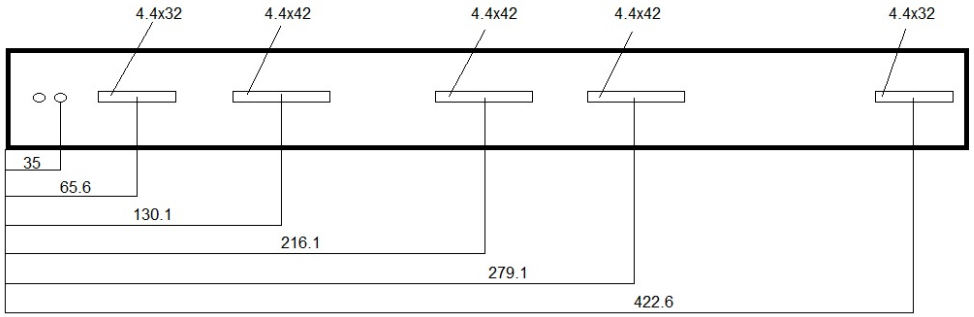

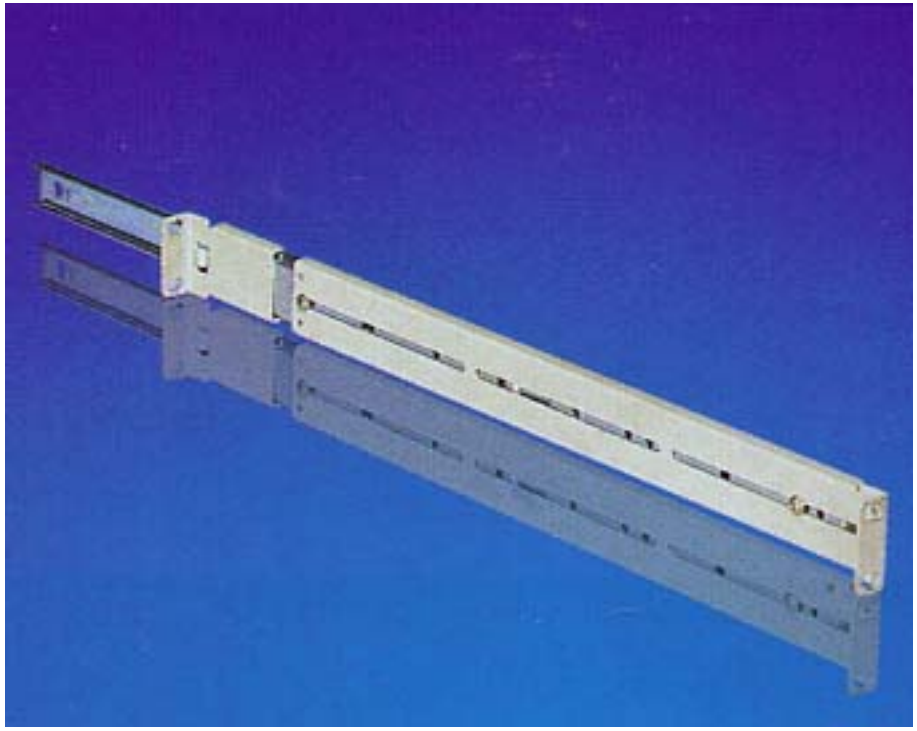

Synergy Global Technology Inc
www. RackmountMart.com