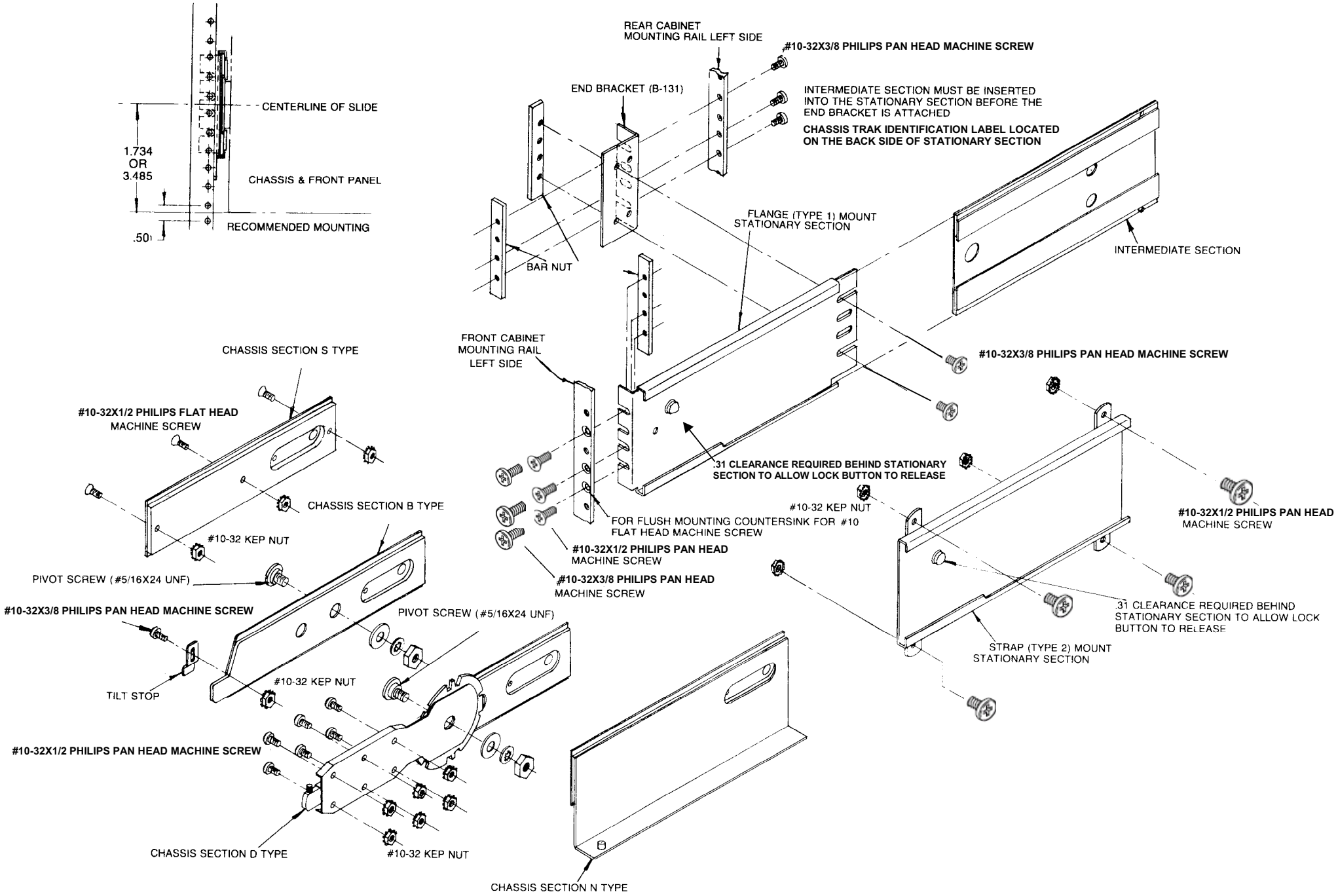
CENTERLINE OF SLIDE
1.734
OR
3.485
CHASSIS & FRONT PANEL
.501
RECOMMENDED MOUNTING
REAR CABINET
MOUNTING RAIL LEFT SIDE
#10-32X3/8 PHILIPS PAN HEAD MACHINE SCREW
END BRACKET (B-131)
INTERMEDIATE SECTION MUST BE INSERTED
INTO THE STATIONARY SECTION BEFORE THE
END BRACKET IS ATTACHED
CHASSIS TRAK IDENTIFICATION LABEL LOCATED
ON THE BACK SIDE OF STATIONARY SECTION
FLANGE (TYPE 1) MOUNT
STATIONARY SECTION
INTERMEDIATE SECTION
BAR NUT
FRONT CABINET
MOUNTING RAIL
LEFT SIDE
#10-32X3/8 PHILIPS PAN HEAD MACHINE SCREW
CHASSIS SECTION S TYPE
#10-32X1/2 PHILIPS FLAT HEAD
MACHINE SCREW
.31 CLEARANCE REQUIRED BEHIND STATIONARY
SECTION TO ALLOW LOCK BUTTON TO RELEASE
CHASSIS SECTION B TYPE
#10-32 KEP NUT
FOR FLUSH MOUNTING COUNTERSINK FOR #10
FLAT HEAD MACHINE SCREW
#10-32X1/2 PHILIPS PAN HEAD
MACHINE SCREW
#10-32X3/8 PHILIPS PAN HEAD
MACHINE SCREW
#10-32 KEP NUT
#10-32X1/2 PHILIPS PAN HEAD
MACHINE SCREW
#10-32 KEP NUT
PIVOT SCREW (#5/16X24 UNF)
#10-32X3/8 PHILIPS PAN HEAD MACHINE SCREW
PIVOT SCREW (#5/16X24 UNF)
.31 CLEARANCE REQUIRED BEHIND
STATIONARY SECTION TO ALLOW LOCK
BUTTON TO RELEASE
STRAP (TYPE 2) MOUNT
STATIONARY SECTION
TILT STOP
#10-32 KEP NUT
#10-32X1/2 PHILIPS PAN HEAD MACHINE SCREW
CHASSIS SECTION D TYPE
#10-32 KEP NUT
CHASSIS SECTION N TYPE